ROHS

http://www.okhro.com

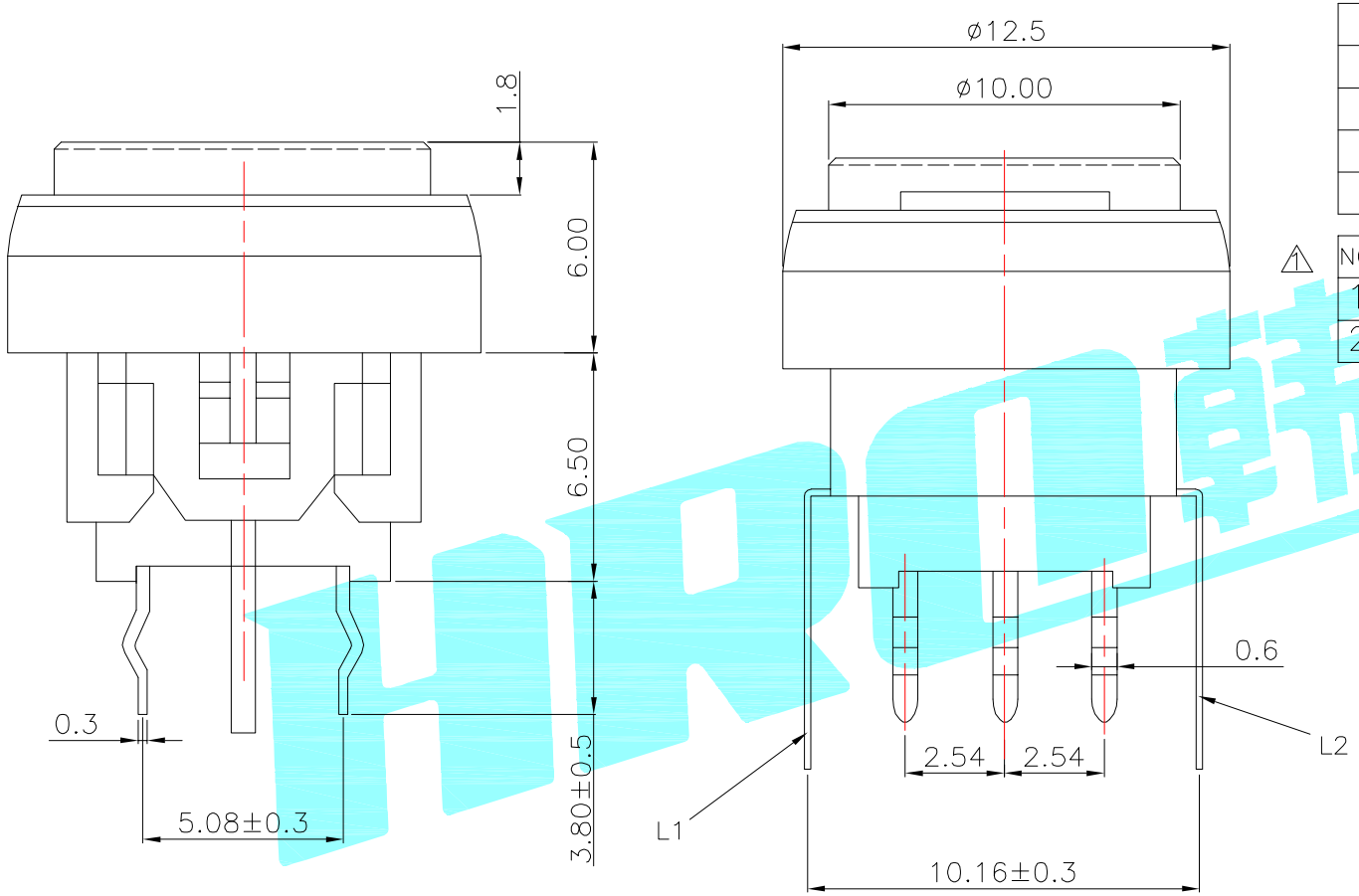

LED colour(LED颜色)	Part No. (料号)
Whiler(白色)	K6-6135D01-□□
Red(红色)	K6-6135D02-□□
Blue(蓝色)	K6-6135D03-□□
Green(绿色)	K6-6135D04-□□

NO.	Operating Type	Part No.
1	Push To Lock(自锁)	K6-6135D□□-L1
2	Push No Lock(无锁)	K6-6135D□□-N1

PCBLayout(Pattern Side)

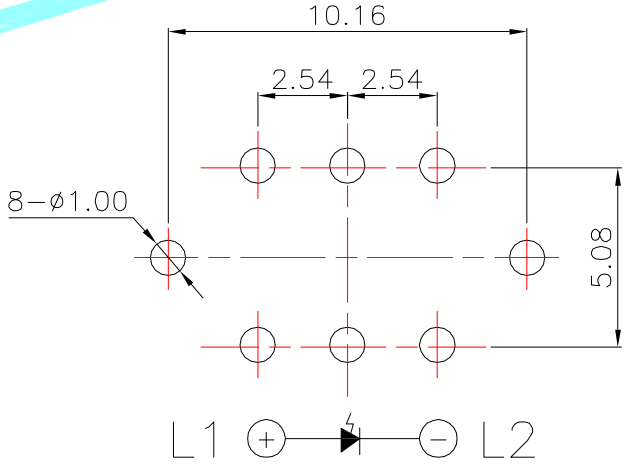

ITEM	PART NAME	TER'NO.	QTY.	MATERIAL	FINISHING	REMARK
②	Terminal	——		Phosphor bronze	Au Plating	——
①	Housing	——	1	Nylon	Black	——

APPROVALS		DATE
DRAWN	J.X.Zhang	2013/11/11
CHECKED		
APPROVALS		

HRO韩荣® ELECTRONICS CO.,LTD

TITLE:	LED Tact Switch
PART NO.	K6-6135D□□-□□
UNIT: mm	SCALE: 1:1
DRAWING NO.	——
SHEET 1 OF 1	PROJ:

TOLERANCES ARE		ANGLE
30~以下	±0.30	±2°
10~30	±0.20	
5~10	±0.15	
~ 5	±0.10	

ECN NO.	REV.	DATE.	DESCRIPTION.	CHANGE.	CHECK.	APPRO.
——	B	——	△1	——	——	——
——	A	——	NEW	——	——	——