ROHS

http://www.okhro.com

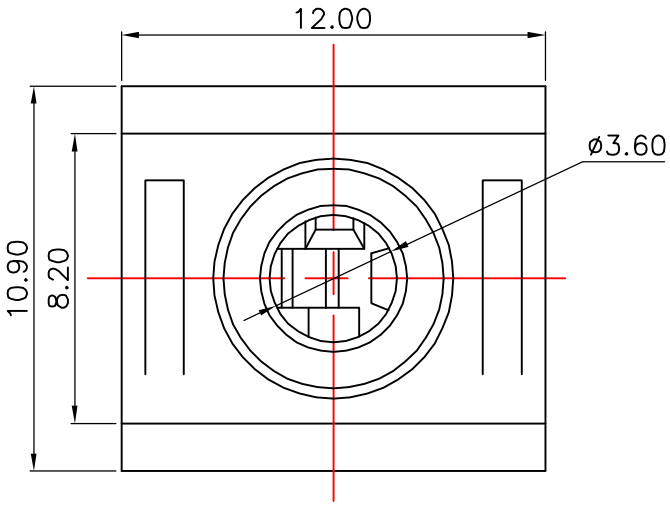

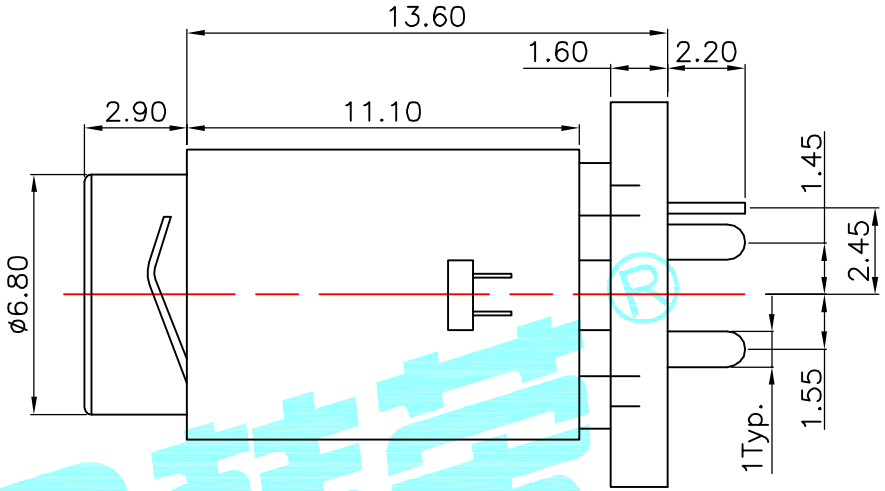

P.C.B LAYOUT(copper-sided view)

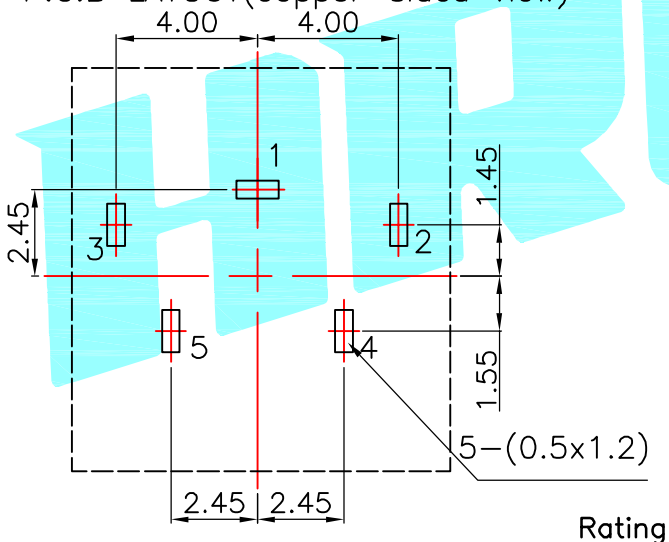

Model No.	PJ-3783
Schematic	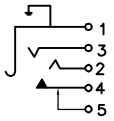

Rating:0.5A 30V DC
Contact Resistance:100 mΩ Max.
Operating temperature:-20℃~70℃
Operating force:3-20N
Operating Life:5,000cycles

ITEM	PART NAME	TER'NO.	QTY.	MATERIAL	FINISHING	REMARK
②	Terminal	——	5	Phosphor bronze	Au Plating	——
①	Housing	——	1	Nylon	Black	——

APPROVALS		DATE
DRAWN	J.X.Zhang	2013/11/11
CHECKED		
APPROVALS		

HRO 韩荣® ELECTRONICS CO.,LTD

TITLE: PHONE JACKES

PART NO. PJ-3783

TOLERANCES ARE			ANGLE
	30~以上	±0.30	±2°
	10~30	±0.20	
	5~10	±0.15	
	~ 5	±0.10	

UNIT: mm | SCALE: 1:1 | PROJ: | DRAWING NO. —— | SHEET 1 OF 1

ECN NO.	REV.	DATE.	DESCRIPTION.	CHANGE.	CHECK.	APPRO.
——	A	——	NEW	——	——	——